In all questions, all dimensions are in mm.

Q. 1

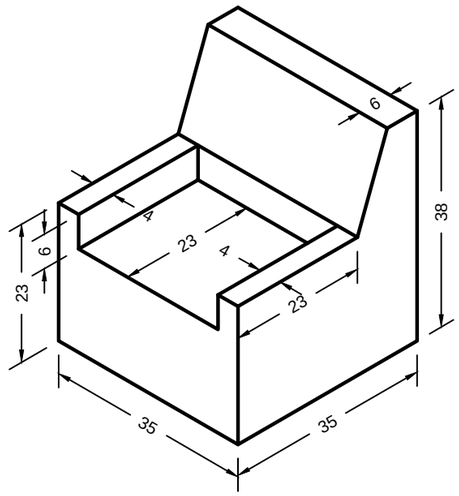

Q. 1 **A**

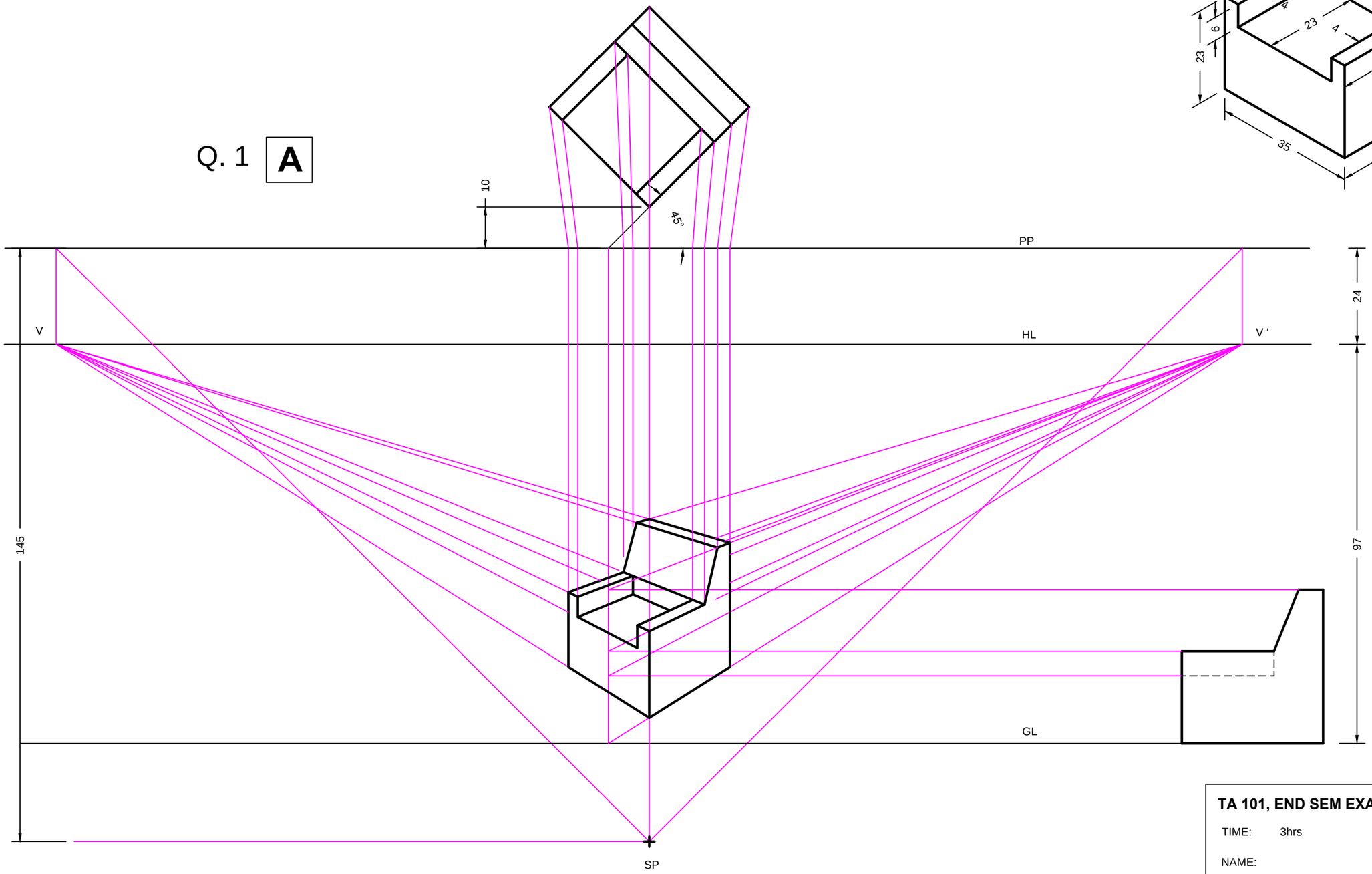

A

TA 101, END SEM EXAM. 2014. IIT KANPUR

TIME: 3hrs MAX. MARKS: 100

NAME:

ROLL NO:

SEAT NO.

SECTION: SIG.: