*Proceedings of the 21st National and 10th ISHMT-ASME Heat and Mass Transfer conference, December 27-30, 2011, IIT Madras, India.*

Paper ID: ISHMT_IND_16_033

# AN EXPLORATORY STUDY OF A PULSATING HEAT PIPE OPERATED WITH A TWO COMPONENT FLUID MIXTURE

**Mauro Mameli**
Department of Industrial Engineering, University of Bergamo, Viale Marconi 5, 24044 Dalmine (BG), Italy.
E-mail: mauro.mameli@unibg.it

**Sameer Khandekar***
Department of Mechanical Engineering, Indian Institute of Technology Kanpur, 208016 Kanpur (UP), India.
E-mail: samkhan@iitk.ac.in

**Marco Marengo**
Department of Industrial Engineering, University of Bergamo, Viale Marconi 5, 24044 Dalmine (BG), Italy.
E-mail: marco.marengo@unibg.it

*(Corresponding Author)

## ABSTRACT

A Pulsating Heat Pipe (PHP) is essentially a passive two-phase heat transfer device. In this study a simple device was built and investigated at different heat inputs with pure ethanol and with its azeotropic binary mixture, respectively. Relevant parameters, i.e., local fluid and wall temperatures and corresponding internal pressure fluctuations, were recorded and the ensuing internal two-phase flow patterns visualized. The local heat transfer coefficient in the evaporator zone as well as the overall thermal resistance for the PHP working with the two fluids have been estimated at different heat inputs and matched. Appreciable difference has not been observed in the two cases, maximum heat transfer coefficient being ~ 4600 W/m$^2$K.

**Keywords**: Two-phase oscillating flow, binary mixture, passive heat transfer.

## INTRODUCTION

A Pulsating Heat Pipe (PHP) is not only a very promising passive heat transfer device but also a representative example of self-sustained oscillating two-phase flow in mini-channels. It usually consists of a tube, (I.D. usually between 1~3 mm, depending on the working fluid) bended in many turns, closed in an endless loop, evacuated and then partially filled with a working fluid [1,2]. Due to the capillary dimensions, the working fluid distributes itself naturally inside the tube in the form of liquid slugs and vapor plugs (alternating slug pattern). When the evaporator section is heated, the two-phase fluid starts moving chaotically within the tube, allowing heat transfer to the condenser section by means of sensible and latent heat transfer. While the overall heat transfer performance of PHPs has been thoroughly investigated in the literature with pure fluids [3-8], little information about PHPs working with binary mixtures is available. Savino et al. [9] suggested that the use of binary and ternary mixtures of water and alcohols may improve the performance of the "wickless heat pipe". This work explores the thermal performance of a PHP working with an azeotropic mixture of water (4.5% wt.) and ethanol (95.5% wt.), in comparison to pure ethanol.

## EXPERIMENTAL SETUP AND PROCEDURE

The PHP consists of a closed loop with two copper U-turns in the evaporator and condenser zones (Fig. 1); the straight tubes in the adiabatic zone are made of borosilicate glass for aiding visualization. All tubes have OD/ID 4 mm/2 mm; the distance between the evaporator and condenser ends is 250 mm.

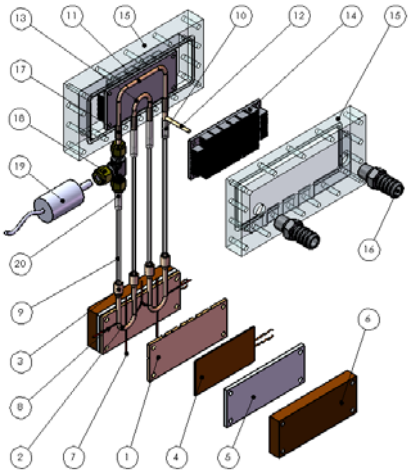

| N° | ITEM |
|---|---|
| 1 | Evap. copper plate |
| 2 | Evap. copper U-turns |
| 3 | Copper joint |
| 4 | Heater |
| 5 | Mica sheet |
| 6 | Bakelite back plate |
| 7 | TC fluid side |
| 8 | TC wall side |
| 9 | Glass tube |
| 10 | Silicon joint |
| 11 | Condenser tube |
| 12 | Vacuum/filling tube |
| 13 | Cond. copper tube |
| 14 | Heat sink |
| 15 | Cooler shell |
| 16 | Cooling water in/out |
| 17 | Silicon seal |
| 18 | T-junction |
| 19 | Pressure transducer |
| 20 | Copper fitting |

*Figure 1: Test-cell assembly of the PHP.*

A smaller copper tube (OD 3 mm/ ID 2 mm) is brazed on the main tube of the condenser section in order to connect the vacuum/filling valve (M/s Upchurch Scientific®). A pressure transducer (Swagelok®, PTI-S-AC5-12AS) is plugged in the left external branch of the adiabatic section by mean of a T-connector, as shown in Fig. 1.

The copper tubes in the condenser section are connected to the glass tubes simply by fitting a small silicon tube (OD 5 mm/ID 3 mm). This approach is not suitable for the copper/glass connections in the evaporator zone due to the high temperatures. In this case a copper joint is located at each end of the U-turns by mean of a steel ring and brazed; then the glass tubes are inserted in the copper fitting and coupled to the copper tubes by mean of an O-ring; finally high temperature polymer resin (Omega®) fills the remaining gap between the copper fitting and the glass tube above the O-ring, thus ensuring a good seal.

One of the main novelty of the present work is that the two copper U-turns in the evaporator section have been drilled (1.0 mm blind hole at the top of the curvature) and two thermocouples (Omega®, K type, bead dimension of 0.3 mm), for measuring the fluid temperature, have been located inside the tube through the hole and fixed with thermal cement (Omega®), as shown in Fig. 2.

Two symmetric copper plates (100 mm x 40 mm x 3 mm) have been built and circular cross section channels have been milled to embed the copper U-turns. Proper thermal contact between the U-turns and the copper plates is obtained using a high conductive paste.

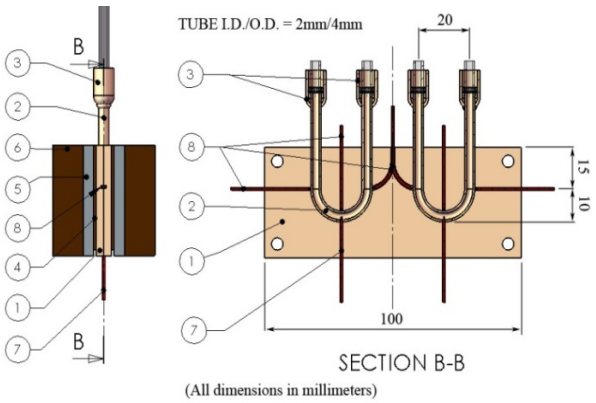


*Figure 2: Test-cell, details of the evaporator zone.*

Six thermocouples have been located on the external tube wall by means of small square channels milled on copper plates. The assembly of the two plates and the U-turns forms the evaporator copper block. Two flat flexible heaters (Minco®) have been placed at each side of the evaporator block. Insulation is provided by two Mica fiber sheets (width: 3 mm) and two Bakelite® back plates (width: 12 mm). Heat input is provided by a two channel power supply (Scientific®).

The copper tubes in the condenser section are also embedded into a block with the same procedure described for the evaporator. In this case the block consists in two symmetric aluminum heat sinks which have been manufactured from a single unit. The condenser block itself fits into a custom Polycarbonate shell made of two transparent plates (160 mm x 75 mm x 20 mm). Four holes allow the copper tube branches to come out the shell and connect with the adiabatic section. As shown in Fig. 3, cooling water is kept at constant temperature of 15°C±1°C by a bath (Haake®, DC-10, K20) and circulated through the condenser.

All the measurement devices have been connected to a PC based DAQ (NI®, cDAQ9172 and NI-9211 for the thermocouples, NI USB-9162 chassis with one NI-9213 module for the pressure transducer). Sampling time for thermocouples and pressure transducer is 160 ms and 120 ms, respectively. In order to obtain vacuum inside the PHP, a rotary gear pump (Varian®, DS102) and a turbo-molecular pump (Varian®, V-70) are connected in series to the filling valve.

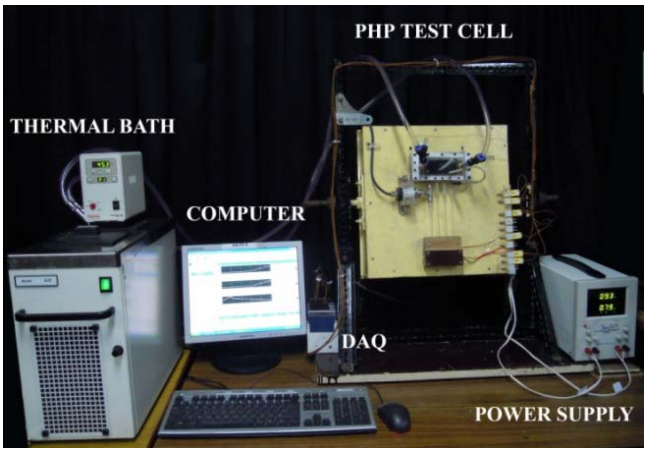


*Figure 3: Experimental test-rig.*

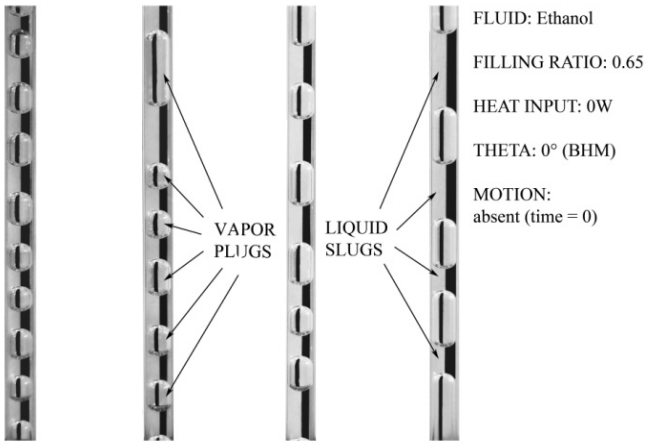


*Figure 4: Steady slug flow pattern at time t = 0 sec.*

Filing of the PHP is only done when the internal vacuum level is at least lower than 0.01 Pa ($10^{-4}$ mbar). In the present work all the experiments have been performed with a volumetric filling ratio of 0.65. A white screen with four black stripes (one for each transparent tube) has been placed behind the adiabatic section for enhancing visualization and a camera (Nikon®, Dx40) captured the different flow patterns in a 100 mm x 100 mm window just above the evaporator section; Fig. 4 shows the typical liquid slugs and vapor plug distribution just after the filling procedure.

## RESULTS AND DISCUSSION

In all the tests, the PHP has been kept in vertical position with the evaporator zone at the bottom and the condenser at the top (Bottom Heat Mode, BHM). Heat input to the evaporator section has been increased with steps of 10 W, starting from $\dot{Q} = 40$ W. In particular, the same experiment has been performed first with pure ethanol (Exp. 1) and then with an azeotropic binary mixture of water (95.5% weight) and ethanol (4.5% weight) as the working fluid (Exp. 2). When the device behavior is stable and a pseudo-steady-state is reached for each heat input level, the local heat transfer coefficient in the evaporator and the overall thermal resistance of the system has been estimated. A description of the flow motion and flow patterns is provided by pictures taken over the transparent adiabatic section.

### Temperatures and Pressure

The wall and fluid temperature trends in the left PHP U-turn, working with the azeotropic binary mixture are shown in Fig. 5. Different heat input levels are also marked on the time line. It can be noticed that the initial heat input level (40W) is not sufficient to sustain a stable PHP behavior. In this first period, fluid motion is chaotic and undergoes several stop-overs, the device is basically working in the so called “heat-switch mode”: when the flow motion is weak, the heat transfer performance is also poor and both wall and fluid temperature, as well as the fluid pressure, raise quickly; in this condition a small local instability is sufficient to initiate a net flow circulation and a consequent decrease in the wall and fluid temperatures due to the better heat transfer efficiency.

From 50 W to 100 W (the corresponding heat flux is $q'' = \dot{Q} / A_{ev}$ = 6.5-13.0 W/cm$^2$, where $A_{ev} = \pi \cdot d_{in} \cdot L_{ev}$), three different zones can be distinguished on the basis of the fluid temperature behavior:

1. From 40W to 50W there are only low peaks in the fluid temperature which are due to the passage of sub-cooled liquid slugs coming from the condenser zone.
2. From 60W to 80W some high peaks together with the low ones appear. Probably, since the amplitude of the pressure oscillation is higher and the vapor formation in the U-turn is not homogeneous, some hot vapor plugs are sucked back to the evaporator zone and undergo an overheating process.
3. From 90W to 100W, the fluid temperature peaks disappear because the evaporation process in entire U turn is more homogeneous.

Even if the net circulating flow is definitely dominant in the PHP without any unstable event, an oscillating component is always present as shown in the fluid pressure plot (Fig. 6). The amplitude of the oscillations increases with the heat input level.

Almost the same pressure and temperature trends, as well as the same internal flow patterns, have been recorded for the PHP working with pure ethanol. There were no quantifiable differences.

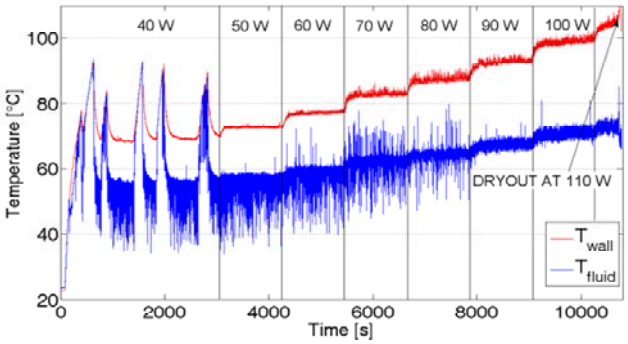


*Figure 5: Temporal evolution of evaporator wall and fluid temperatures for different heat inputs.*

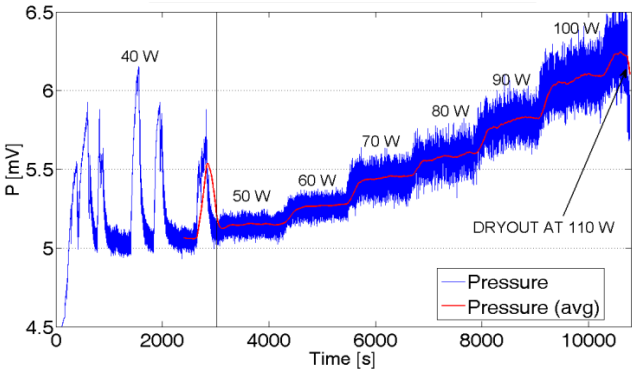


*Figure 6: Temporal evolution of local fluid pressure signal for different heat inputs.*

## Flow patterns visualization

When the heat input level is between 40 W and 50 W, net flow circulation becomes a constant feature. If a vapor plug coming from the a slug flow down-comer is passing through the heated section (i.e., left evaporator U-turn), a part of its liquid film evaporates into vapor plugs, and the resulting vapor pressure becomes strong enough to push the adjacent liquid slug through the next branch up to the condenser section. This is exactly what is happening in the second branch of Fig. 7, where a liquid slug is being pushed against gravity by the vapour expansion occurring in the left evaporator U-turn. Due to symmetry, the same phenomena are also happening in the third and fourth branches and, since the device is closed in a loop, the vapour pressure in the last branch pushes the fluid up to the condenser and then again down in the first branch (flow direction is explicitly shown in Fig. 7). Thus, owing to a well defined flow circulation, a conspicuous amount of liquid, may be in the form of liquid slugs or in the form of a thin liquid film surrounding each vapour plug, is always available in the evaporator section. Regarding the flow pattern, the first and third branches are always pure slug down-comer and the second and fourth branches are characterized by a semi-annular flow pattern, consisting of long annular periods alternated with some occasional transits of the liquid slugs. When the heat input level goes up to 60 W (Fig. 8) a flow pattern transition occurs in the two up-comers.

The vapour pressure, and the resulting inertia force thereof, in the evaporator section, is now able to break most of the liquid slug menisci bridges and therefore the flow pattern in the two up-comers is changing from semi-annular to pure annular. The liquid film is thick and wavy; a higher amount of heat transfer is due to latent heat of vaporization.

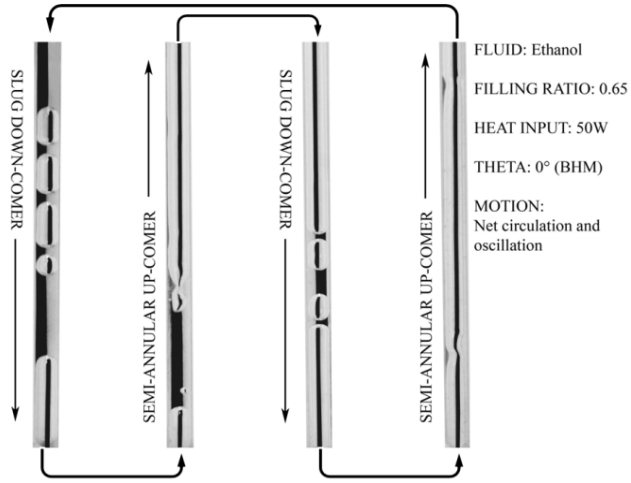


*Figure 7: Flow pattern during the pseudo steady state at 50W (SLUG + SEMI-ANNULAR).*

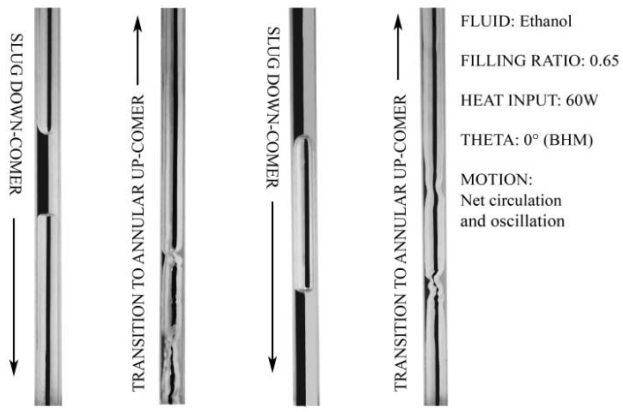


*Figure 8: Flow pattern during the pseudo steady state at 60W (TRANSITION from semi-annular to annular up-comers).*

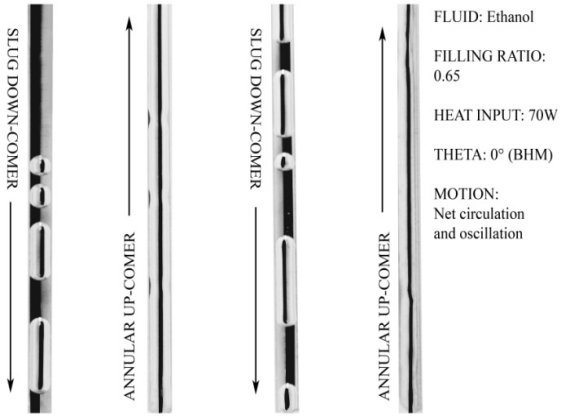


*Figure 9: Flow pattern during the pseudo steady state at 70W (SLUG + ANNULAR).*

When the heat input level is augmented to 70 W (Fig. 9) and then to 80 W the fluid, which is going up through the second and third branch, has reached the fully annular flow pattern. The liquid film is thinner and less surface waviness is recorded.

Finally, the last two stable pseudo steady states (90 W and 100 W; Fig. 10) are again characterized by annular up-comers and slug-flow down-comers. In these cases, the liquid film in the two up-comers is very thin and, in spite the pressure signal is widely oscillating (liquid slugs in the third down-comer are getting deformed by the strong oscillation), the fluid temperature in the evaporator is not having large variations as before: the high heat power is now able to evaporate the great majority of the liquid coming from the slug down-comer without any vapor reflux.

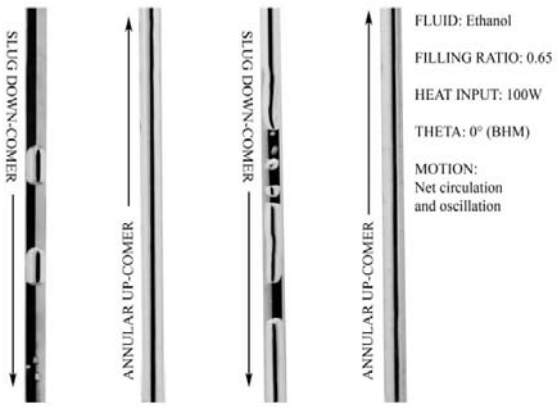


*Figure 10: Experiment 2, flow pattern during the pseudo steady state at 100W (SLUG *unstable film thickness + ANNULAR).*

If the heat input level is increased to 110 W, the slug down-comers are not able to provide a sufficient amount of fresh liquid phase and an abrupt dry-out occurs in a few minutes.

## Local heat transfer and thermal resistance

When the system is able to reach a steady state, the local heat transfer coefficient can be estimated as:

$$\tilde{h}_{ev} = \frac{\dot{Q}}{\Delta T_{w-f} * A_{ev}} [W/m^2K] \quad (1)$$

where, $\Delta T_{w-f}$ is plotted in Fig. 5. The local heat transfer coefficient in the evaporator zone (blue line = direct estimation, red line = moving average) is a function of the heat input level, the plot also corresponds to the five different flow patterns which have been recognized during the PHP operation and captured by the camera.

Before the final dry-out occurs, the local heat transfer coefficient approaches an asymptotic value of 4600W/m$^2$K confirming that for high heat input levels most of the local heat transfer is due to latent heat and the system is about to reach its maximum potential.

In order to appreciate the overall performance of such device, the overall thermal resistance has been estimated as follows:

$$R_{eq} = \Delta T_{w-c} / \dot{Q} [K/W] \quad (2)$$

As noticeable in Fig. 12, no quantifiable difference has been recorded between the PHP running with the azeotropic mixture and that running with pure ethanol.

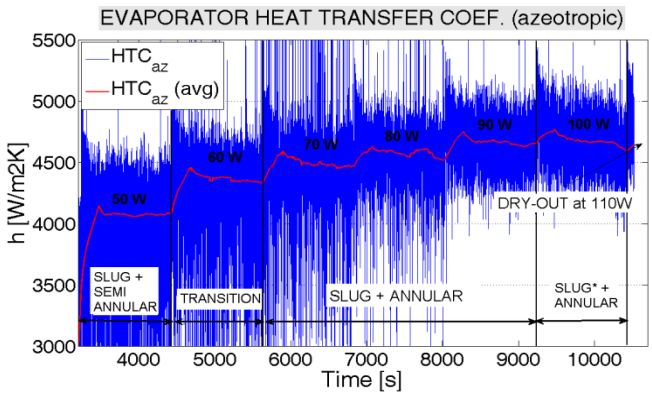


*Figure 11: Temporal evolution of local heat transfer coefficient and flow regimes.*

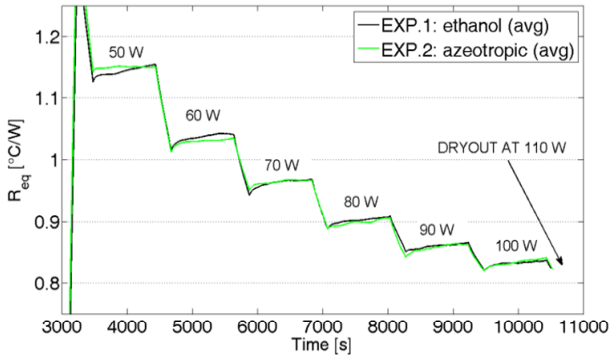


*Figure 12: Temporal evolution of overall thermal resistance for different heat inputs.*

Further research on the long chain alcoholic binary and ternary mixtures is needed to provide more data and check if the PHP efficiency may be enhanced.

## CONCLUSIONS

A novel PHP experimental apparatus working with an azeotropic binary mixture of ethanol (95.5% weight) and water (4.5% weight) has been designed in order to record both local fluid and wall temperatures in the evaporator zone, acquire the pressure signal and capture the slugs and plugs distribution in the adiabatic zone. The following conclusions can be drawn:

- A start-up flux of ~ 6.5 W/cm$^2$ is needed to commence stable fluid motion and to attain an acceptable pseudo-steady-state.
- During a stable steady state, a net circulation, together with an oscillating component, is always recognizable at each heat input level.
- The local heat transfer coefficient in the evaporator zone has been calculated and correlated to the different flow patterns which have been visualized at each heat input level. It approaches an asymptotic value ~ 4600W/m$^2$K, before the final dry-out occurs.
- No measurable difference has been recorded between the PHP running with the azeotropic mixture and the PHP running with pure ethanol, in terms of overall thermal resistance.
- Further research should be devoted to study the effects of the so called "self-rewetting fluids" on the slug-plug distribution in order that PHPs with a small number of turns can also reliably work in a wider range of boundary conditions.

## NOMENCLATURE

| Symbol | Quantity | SI Unit |
|---|---|---|
| A | Surface area | m$^2$ |
| d | Diameter | m |
| $\tilde{h}$ | Local heat transfer coefficient | W/ m$^2$K |
| L | Length | m |
| n | Number of parallel channels | [-] |
| q" | Heat flux | W/cm$^2$ |
| $\dot{Q}$ | Power heat input | W |
| R | Thermal resistance | K/W |
| T | Temperature | °C |
| **Subscripts** | | |
| az | Azeotropic binary mixture | |
| et | Ethanol | |
| ev | Evaporator | |
| eq | Equivalent | |
| fluid | Fluid | |
| in | Inner | |
| out | Outer | |
| wall | Wall | |
| w-f | Wall to working fluid | |
| w-c | Wall to cooling medium | |

## REFERENCES

[1] Akachi, H. Structure of a Heat Pipe. U.S. Patent Number 4921041, 1990.

[2] Akachi, H. Structure of Micro-Heat Pipe. U.S. Patent Number 5219020, 1993.

[3] Khandekar S., Charoensawan P., and Groll M., and Terdtoon P., Closed Loop Pulsating Heat Pipes-Part B: Visualization and Semi-Empirical Modeling, App. Therm. Eng., Vol. 23(16), pp. 2021-2033, 2003.

[4] Kim J. S., Bui N. H., Kim J. H., Kim J. W., and Jung H. S. Flow Visualization of Oscillation Characteristics of Liquid and Vapor Flow in the Oscillating Capillary Tube Heat Pipe, KSME Int. J., Vol. 17(10), pp. 1507-1519, 2003.

[5] Khandekar S. and Groll M., An Insight into Thermo-Hydraulic Coupling in Pulsating Heat Pipes, Int. J. Thermal Sciences, Vol. 43(1), pp. 13-20, 2004.

[6] Liu S., Li J., Dong X., and Chen H., Experimental Study of Flow Patterns and Improved Configurations for PHPs, Int. J. Thermal Science, Vol. 16, pp. 56-62, 2007.

[7] Intagun W., Sakulchangsatjatai P., and Terdtoon P., Effect of Working Fluids on Internal Flow Patterns of CLOHPat Maximum Heat Flux State, Proc. 9th Int. Heat Pipe Symp., Kuala Lumpur, Malaysia, 2008.

[8] Khandekar S., Gautam A. P. and Sharma P., Multiple Quasi-Steady States in a Closed Loop Pulsating Heat Pipe, Int. J. Therm. Sc., Vol. 48(3), pp. 535-546, 2009.

[9] Savino R., Cerere A., Di Paola R., Surface Tension Driven Flow in Wickless Heat Pipes with Self-rewetting Fluids, Int. J. Heat Fluid Flow, Vol. 30, pp. 380-388, 2009.