Active Vibration Isolation of Machine Tools Using an Electro-Hydraulic Actuator

M. Law, M. Wabner, A. Colditz, M. Kolouch, S. Noack and S. Ihlenfeldt

Fraunhofer IWU

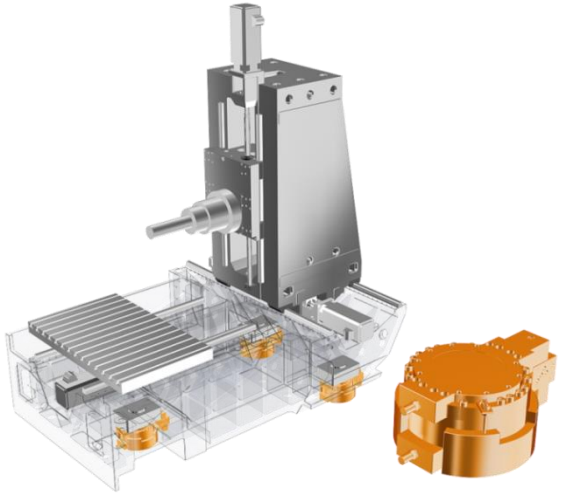

VMPT2015

June 2-5, 2015, Vancouver, Canada

Ground vibrations influence machine accuracy

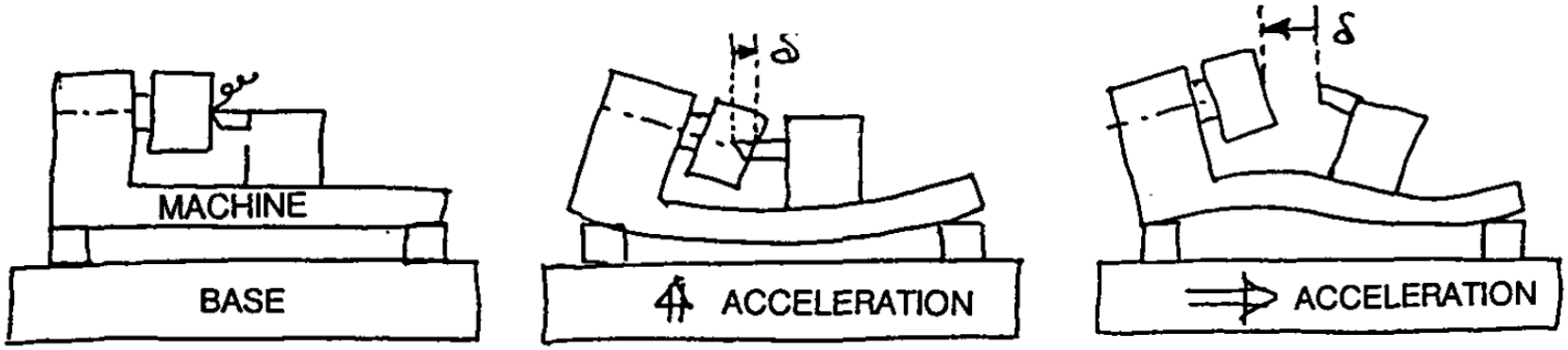

DeBra (1992)

- Ground vibrations distort the machine and results in loss of machining accuracy
- Insulating the machine from its production environment is difficult
- Hence, necessary to isolate machine from disturbances to maintain accuracy

Vibration isolation: passive and/or active?

Passive isolators: High damping and relatively low support stiffness

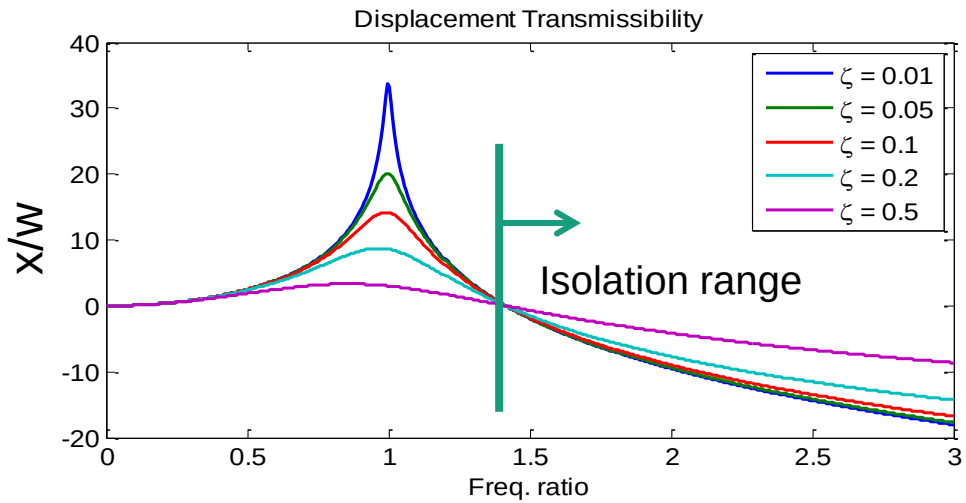

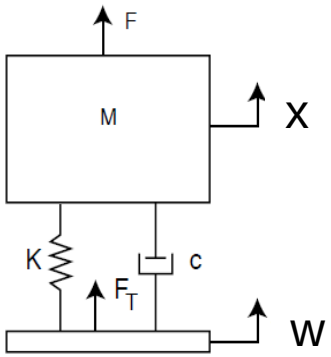

- Passive isolators offer simple and effective isolation solutions
- Dynamic instabilities like rocking due to the low support stiffness
- Difficult to design when ground vibrates with unpredictable waveform that has broadband spectrum

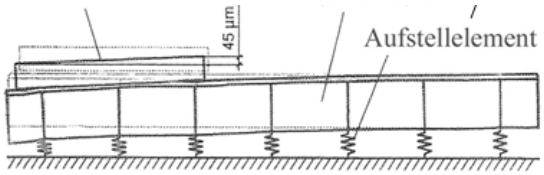

Active isolators and objectives of this work

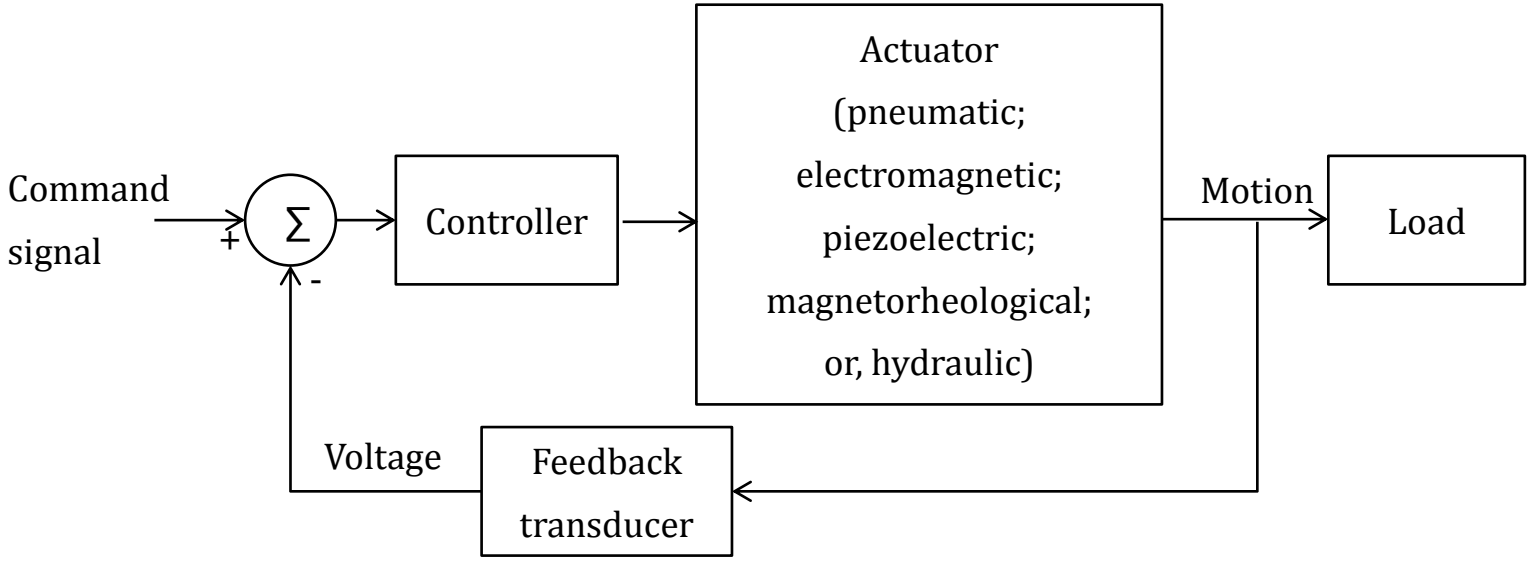

Actuating principles

- Pneumatic → Unable to support high loads
- Electromagnetic → Low strokes
- Magnetorheological → Suffers from hysteresis
- Piezoelectric → Small deflection capacities

Hydraulic actuators

- ✓ High static stiffness
- ✓ No hysteresis
- ✓ Large deflection

Proposed electro-hydraulic isolation system @ IWU

Working principle: displacement compensation

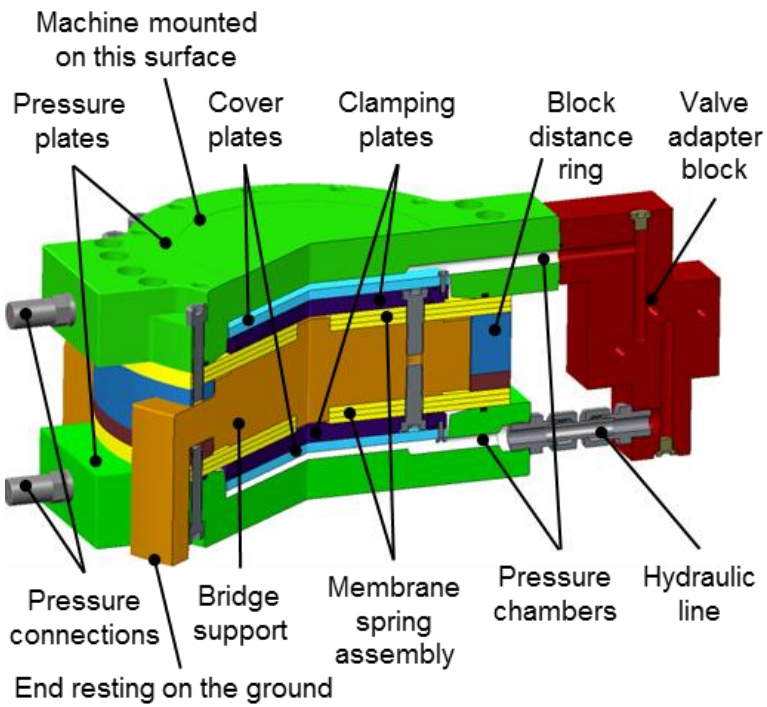

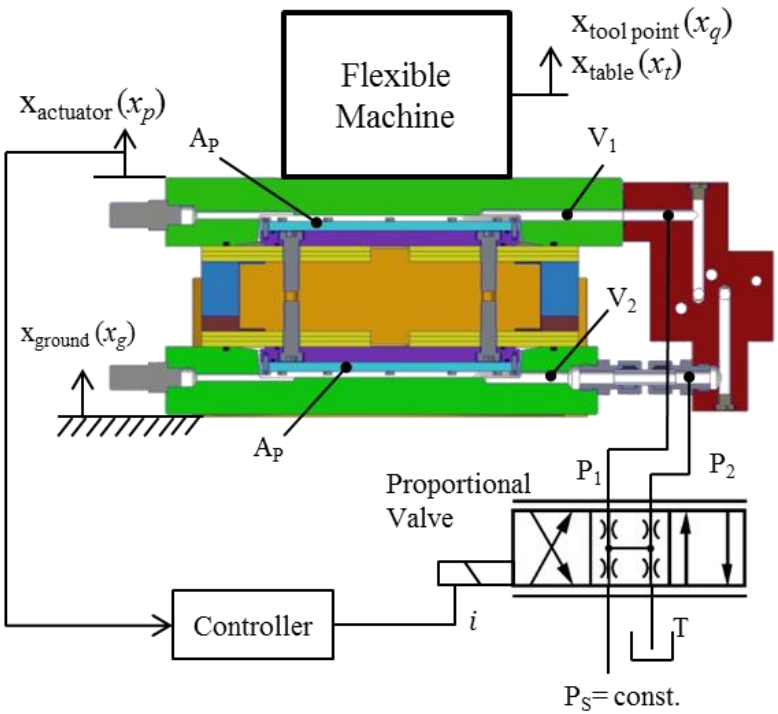

Actuator dynamics

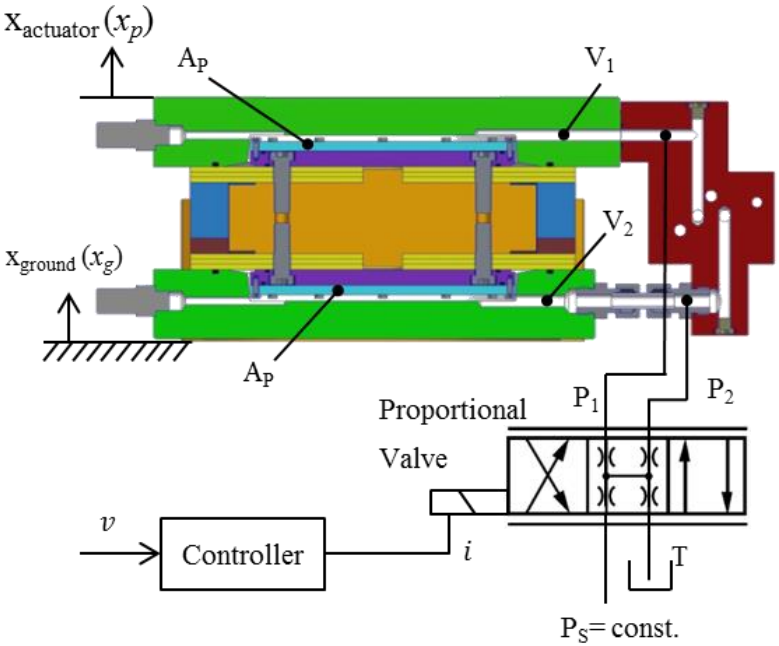

$$G_{EHA} = \frac{x_p}{v} = \frac{x_v}{v} \times \frac{x_p}{x_v} = G_{valve} G_{act}$$

Valve dynamics:

$$G_{valve} = \frac{x_v}{v} = K_v \left[\frac{1}{1 + \left(\frac{2\zeta}{\omega_{n_v}}\right) s + \left(\frac{s}{\omega_{n_v}}\right)^2} \right]$$

Hydraulic and Piston dynamics:

$$Q_L = K_Q x_v - K_C P_L; \qquad Q_L = A_p s x_p + \frac{V_t}{4\beta} s P_L$$

$$\begin{pmatrix} V_t = V_1 + V_2 = 2V_0; \\ P_L = P_1 - P_2 \end{pmatrix}$$

$$F_p = P_L A_p = M s^2 x_p + C s x_p + K_L x_p + F_L$$

$$G_{act} = \frac{x_p}{x_v} = \frac{K_Q / A_p}{\left(s + \frac{K_C K_L}{{A_p}^2}\right)\left(\frac{s^2}{{\omega_h}^2} + \frac{2\delta_h}{\omega_h} + 1\right)}$$

Hyd. stiffness and damping

$$\omega_h = \sqrt{\frac{4\beta {A_p}^2}{V_t M}} \qquad \delta_h = \frac{K_C}{A_p}\sqrt{\frac{\beta M}{V_t}}$$

Meritt (1967);
Jelali & Kroll (2003)

Parameter identification

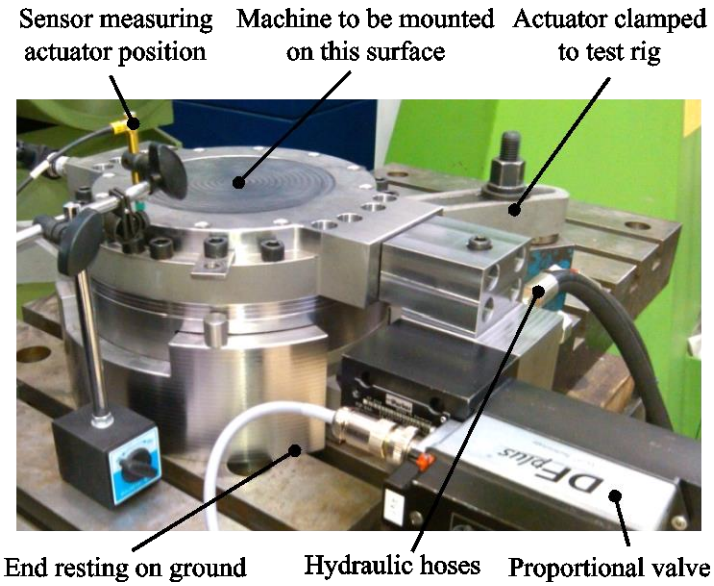

System identification:

$$\min f_{objs}(x_d) = \sum_{i=1}^{n_p} r_i^2 \; such\ that\ lb \le x_d \le ub$$

$$r_i = G_{EHA_{measured}} - G_{EHA}(x_d)$$

$$x_d \subset \{K_L; C; \omega_{n_v}; \zeta; K_Q; K_C\}$$

$$G_{EHA} = \frac{x_p}{v} = G_{valve} G_{act}$$

Jelali & Kroll (2003)

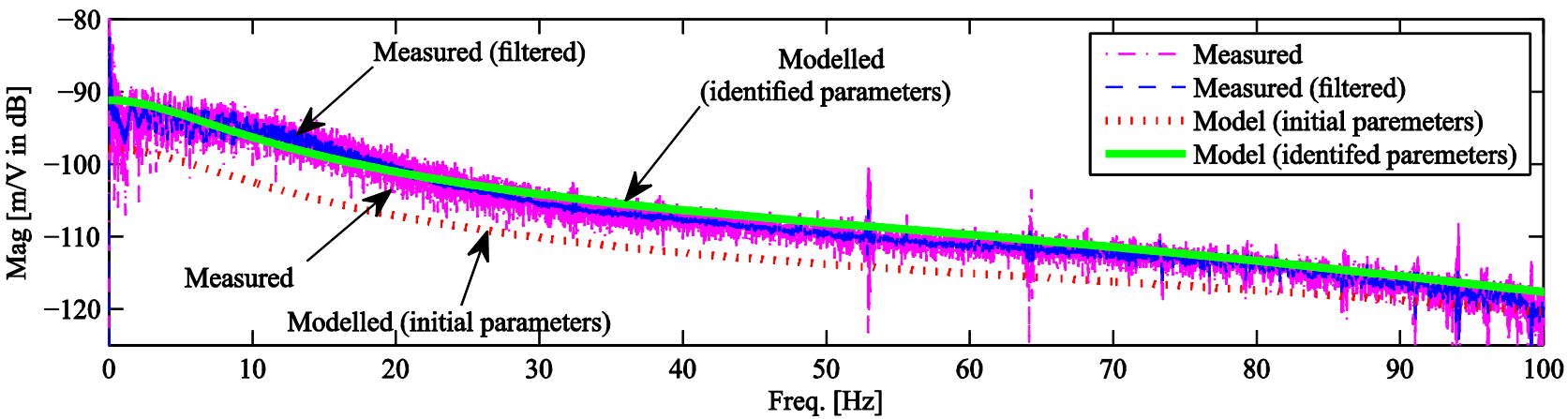

Active isolation of machine tools

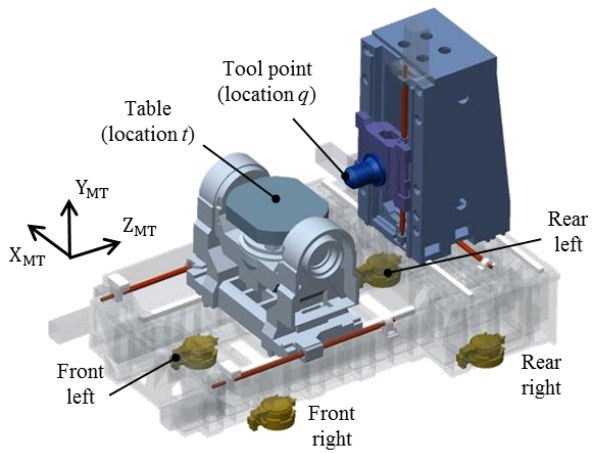

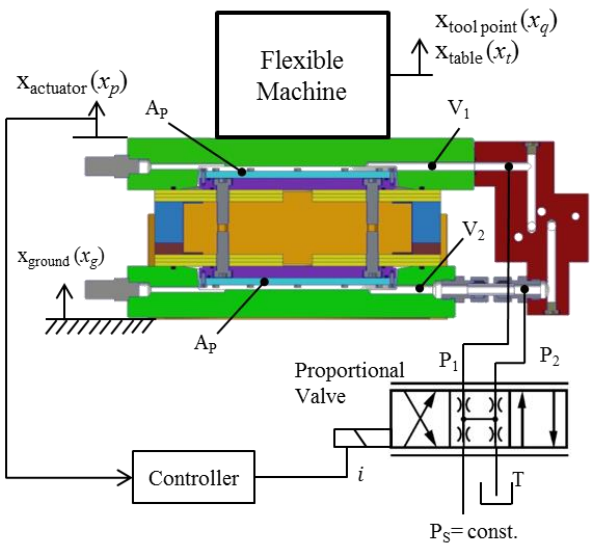

Transmissibility between ground and tool point:

$$TR_{qg} = \frac{x_q}{x_g} = \frac{x_p}{x_g} \times \boxed{\frac{x_q}{x_p}}; \qquad p = 1 \dots 4$$

Transmissibility between ground and actuator

Transmissibility between actuator and tool point

$$TR_{qp}(\omega) = \frac{x_q(\omega)}{x_p(\omega)} = \frac{x_q(\omega)/F_p(\omega)}{x_p(\omega)/F_p(\omega)} = \frac{H_{qp}(\omega)}{H_{pp}(\omega)};$$

wherein: $$H_{ij}(\omega) = \sum_{r}^{N_m} \frac{\Phi_{i_r}\Phi_{j_r}}{-\omega^2 + i_m 2\zeta_r \omega \omega_{n_r} + \omega_{n_r}^2}$$

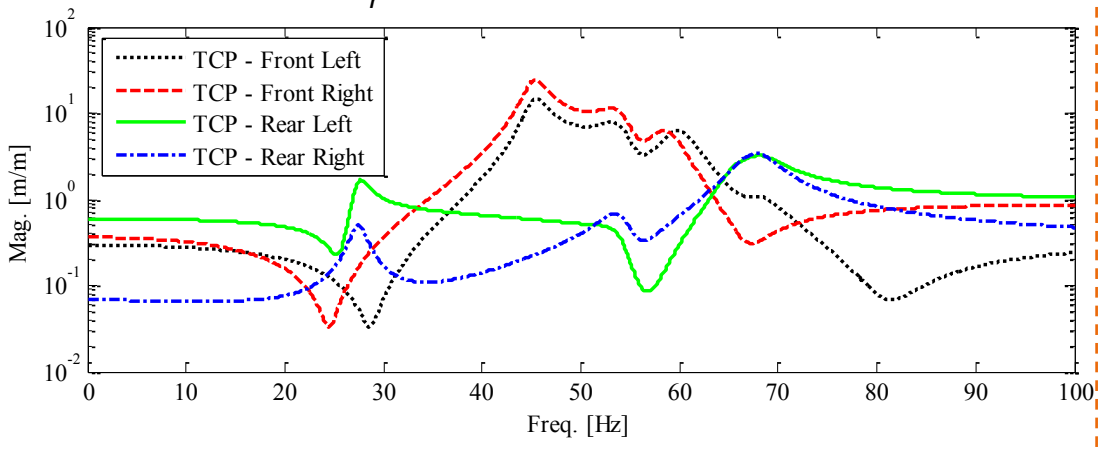

Controlled transmissibility

TR between ground and tool point:

$$TR_{qg} = \frac{x_q}{x_g} = \boxed{\frac{x_p}{x_g}} \times \frac{x_q}{x_p}; \qquad p = 1 \dots 4$$

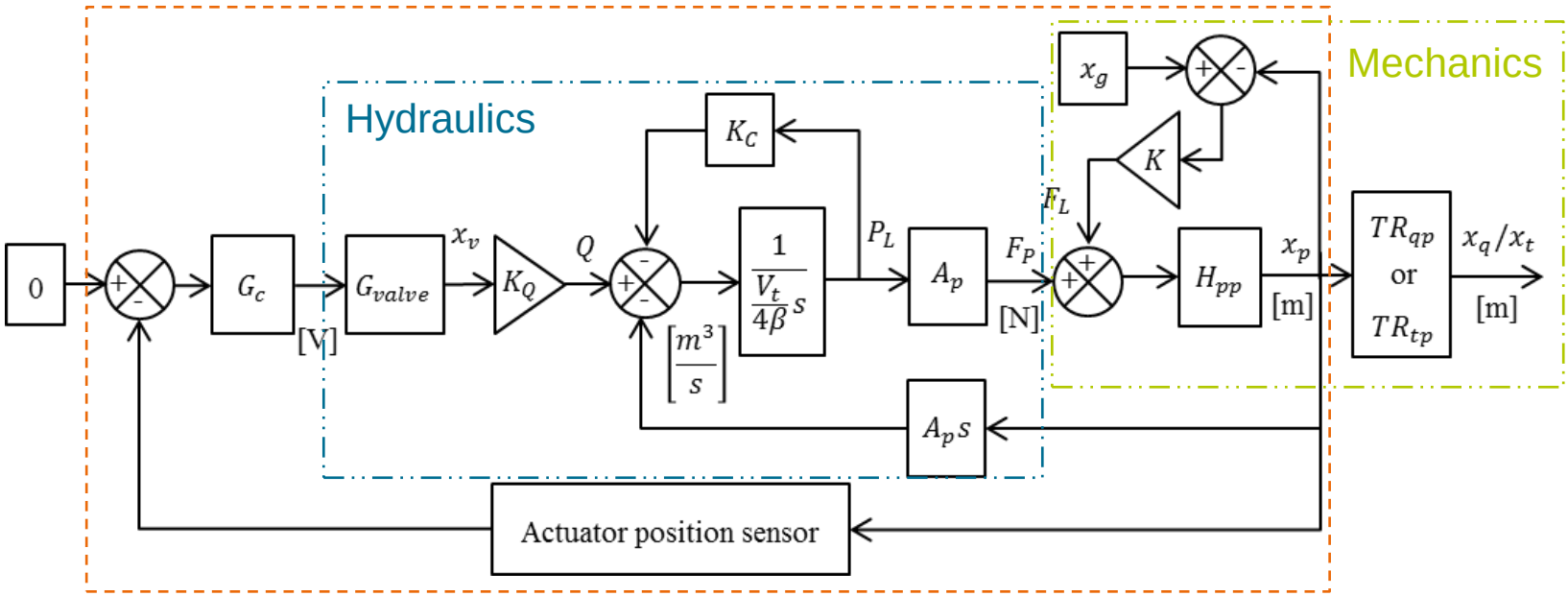

Controlled transmissibility

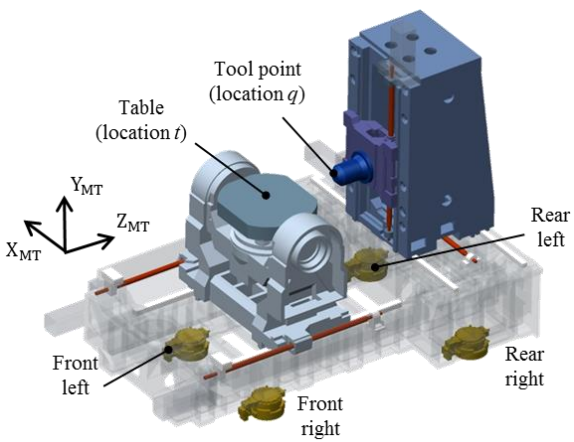

TR between ground and tool point

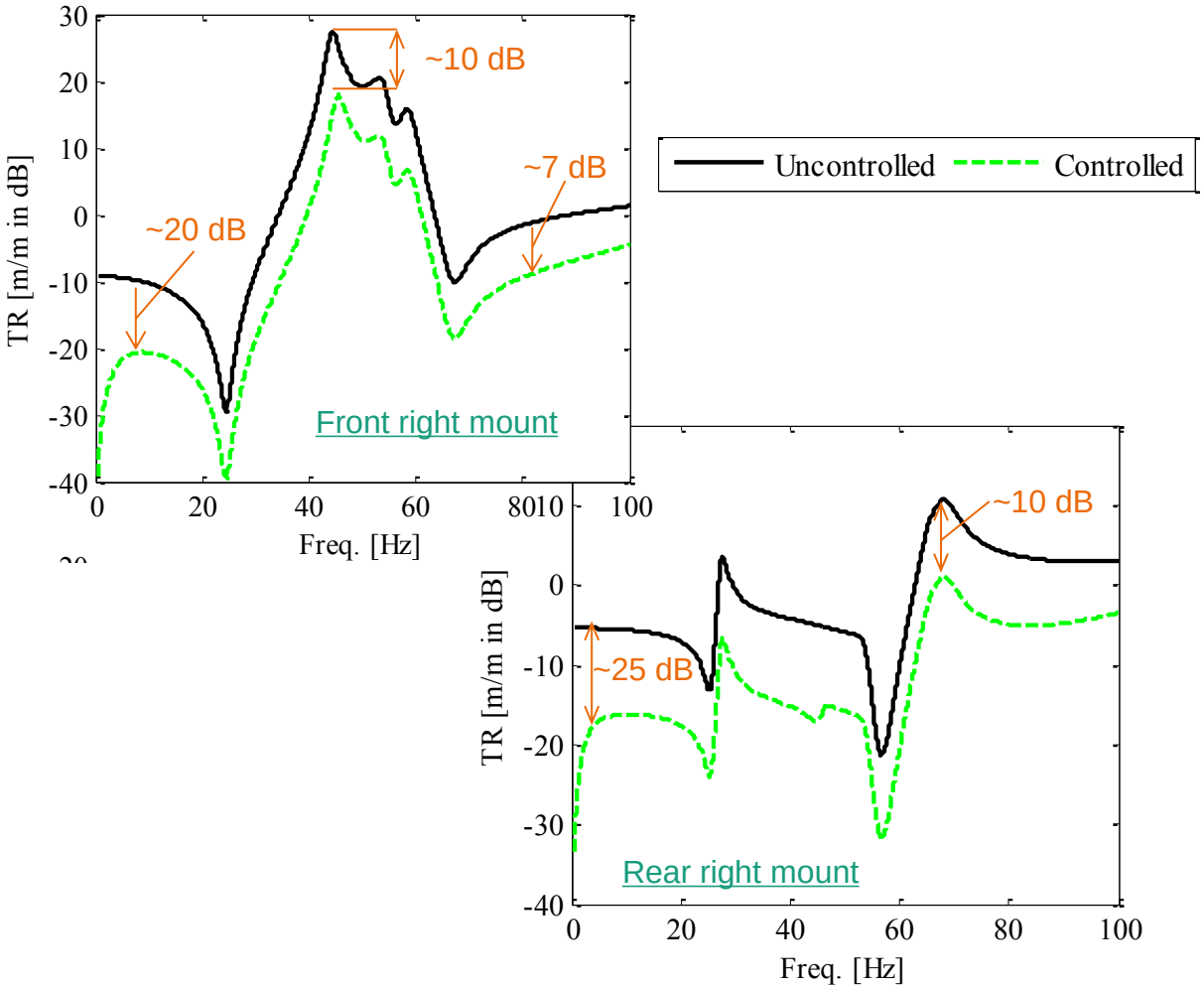

Summary

- ✓ Designed and developed a novel electro-hydraulic isolator
- ✓ Actuator has a high static stiffness to support large inertial loads
- ✓ Controlled closed-loop transmissibility shows actuator:
  - ❖ Has a high bandwidth (~100 Hz)
  - ❖ Can attenuate ground motion transmitted to the tool/table up to 25 dB

Future work

- ➢ Further experimental characterization of actuator
- ➢ Investigate advanced control strategies

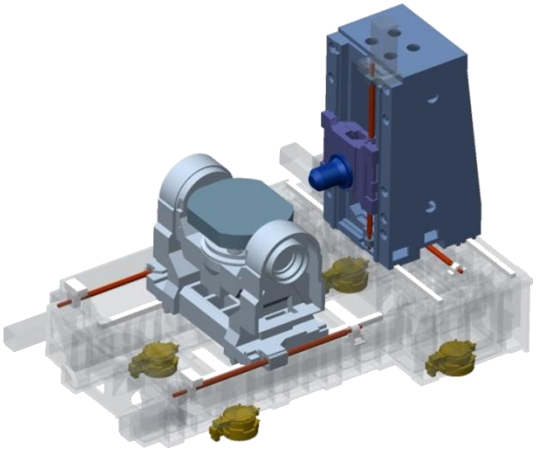

Acknowledgment:

Fraunhofer Gesellschaft's **ICON** Project for Strategic Research

Co-Operation on Sustainable Energy Technologies

Thank you for your attention!

Questions?

Mohit Law

mohit.law@iwu.fraunhofer.de

+49 371 5397-1518