Indian Institute of Technology Kanpur

TA101 : Engineering Graphics

January-May 2008

Homework No. 9

Perspective Views

Question 1

Draw the *axonometric* perspective view with *two* vanishing points of the object whose isometric sketch is shown in Figure 1. The sight point is at point A, which is x=-25m, y=-25m, z=50m from the front corner of the object. The viewing plane passes through the front corner of the object. All dimensions are in meters. Mention the scale of your view.

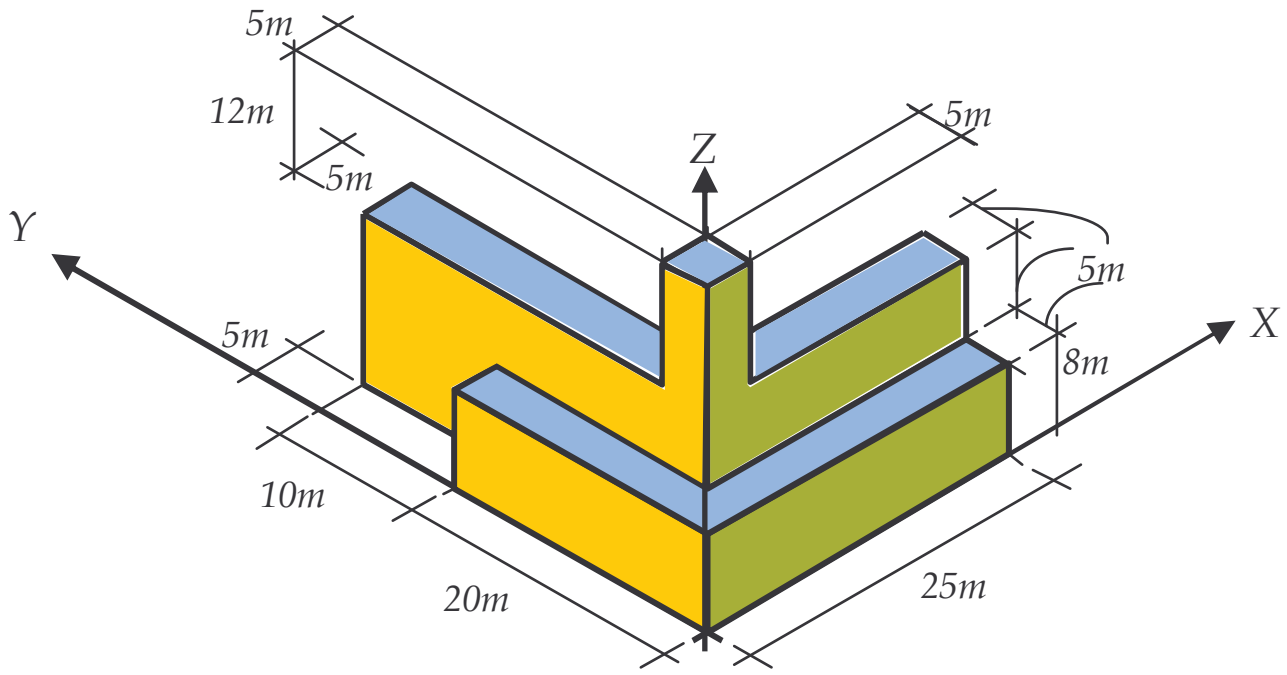

Figure 1